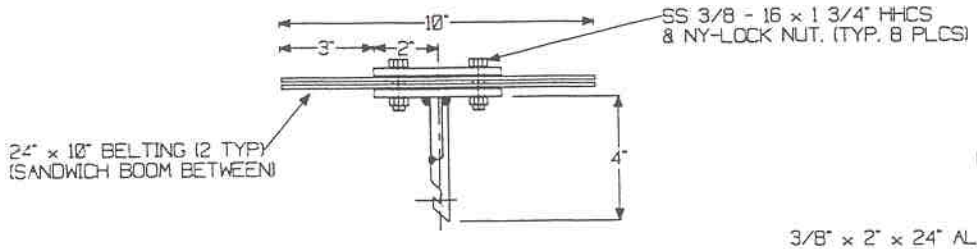

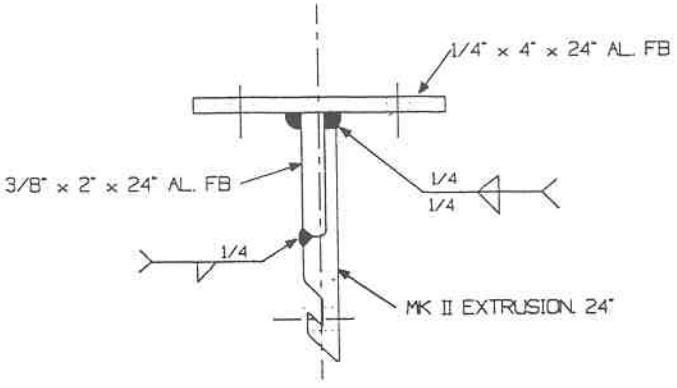

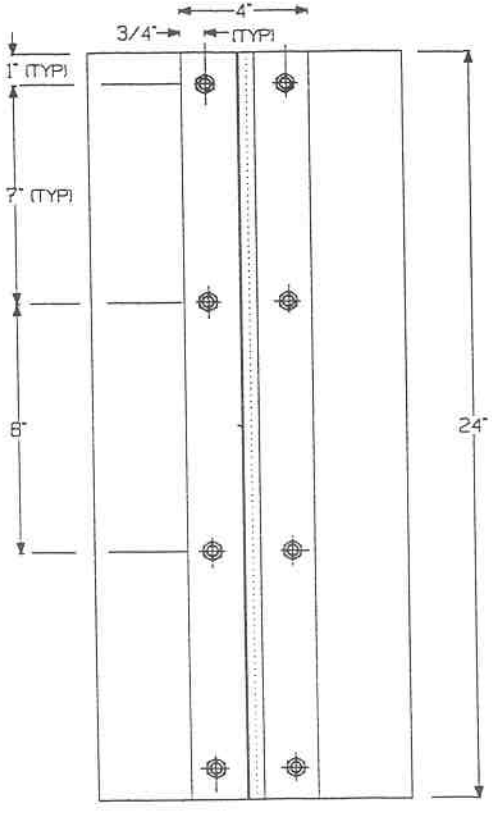

SLICKBAR
PRODUCTS CORPORATION
16 Beach Street
Seymour, Ct. 06483
Tel. (203) 888-7700

24" MID-POINT "T" CONNECTER

SCALE 1/4	DRAWN BY: J. J. S.	DRAWING NUMBER 15B5015
DATE 12/11/95	APPROVED BY:	